R&D
NESTER

REAL TIME POWER SYSTEMS SIMULATION LABORATORY

CREATING A SMART ENERGY FUTURE

R&D NESTER REAL TIME POWER SYSTEMS SIMULATION LABORATORY

The continuous growing integration of renewable energy sources, the needs for an environmentally friend energy system, the uprising of energy storage solutions and more generally the deployment of the concept of Smart Grids changed completely the context under which power systems are operated nowadays.

Simultaneously, the digitalization of the power system, i.e. the usage of digital solutions in power systems, is also taking place all around the world.

Under this context, and to leverage the application of new products/ solutions, R&D Nester has a Real Time Power System Simulation (RTPSS) Laboratory, providing a unique research and simulation infrastructure to analyze the behavior of different components of the power system.

Housing state-of-the-art equipment and different test tools it is possible to simulate different scenarios of power systems and assess their performance.

The introduction of digital solutions in power systems creates the opportunity for applications of new solutions and the Laboratory is also equipped with testing tools that allow a co-simulation of power system and communication networks.

Different software and hardware solutions for simulation of communication networks running together with power systems simulation solutions offer this possibility.

The vast range of simulation possibilities include Hardware-in-the-loop (HIL) techniques and in addition to the simulation in the Laboratory premises it is possible to have a remote access to some of its functionalities.

LABORATORY ARCHITECTURE

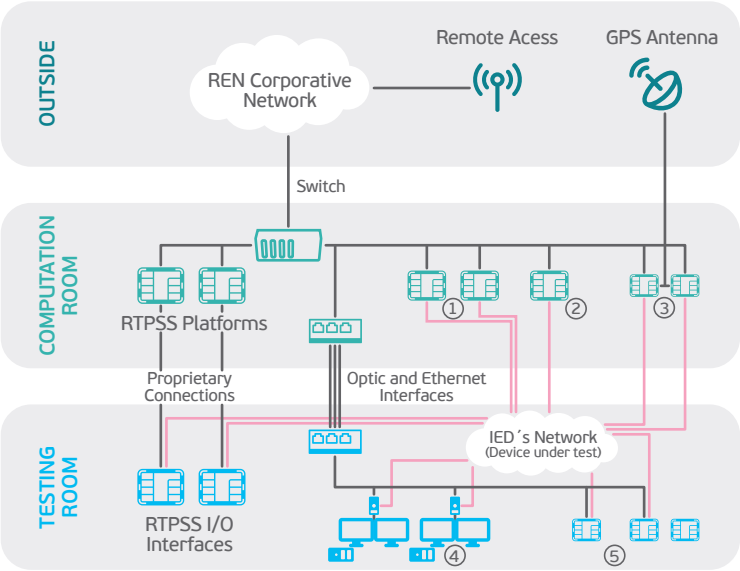

1. Traffic generation and impairment
2. Time synch analyser
3. Time servers
4. Workstations
5. IEC 61850 test set and power amplifiers

KEY BENEFITS FOR PARTNERS

The large spectrum of tests that can be performed in the laboratory provide R&D Nester partners with knowledge and valid solutions under the scope of the different simulation possibilities.

Testing of power systems and communication networks, including not only pure simulation environment but also HIL possibilities are great advantages for testing of new products and solutions.

Grid operators can test the performance of their grids in real time the deployment of automation and protection devices using HIL techniques; Device manufacturers can verify their products functionalities operating in a close tor real world environment, testing their product compliance, amongst many other possibilities.

Contact the R&D Nester team for further details and a cooperation opportunity.

TECHNICAL SPECIFICATION

RTPSS Platforms

OPAL RT
OP5600

CEPRI
ADPSS

- **RTPSS**

- Up to 90 high performance cores;
- Interfaces: 65 Analog Outputs, 224 Digital Inputs and 224 Digital Outputs, 16 RJ45 ports and 24 optical ports (compatible with IEC 61850);
- Different software families (up to 2000 buses in EMT and 10000 buses in electromechanical transient stability simulation).

- **Time synchronization**

- Redundant Time Synchronization Servers, allowing the synchronization of laboratory equipment and devices under test, compatible with the following protocols: PTP, IRIG-B, SNTP, PPS and 10 MHz.

- **IEC 61850 testing tools**

- A protection test set dedicated to IEC 61850, allowing the generation of GOOSE and Sampled Values to be sent to the devices under test for open loop tests. It also translates GOOSE messages into hardwired outputs and vice-versa, for testing of binary outputs of protection devices;
- Four power amplifiers, to convert low voltage outputs of the RTPSS platforms and test set to 100 V, 1A to be used in protection devices;
- A software package to check the IEC 61850 messages;
- A software family to perform IEC 61850 conformity tests including data model and communication services of the devices under test;
- An IED specification and configuration tool that allows the creation of IEC 61850 systems, and the test of interoperable solutions.

- **Communication Networks**

- A software package to simulate communication networks, permitting the execution of assessment studies without real devices or performing HIL simulations;
- Devices to inject load in the network and to impair the circulating messages.

POSSIBLE APPLICATIONS

R&D Nester RTPSS Laboratory is composed of state-of-the-art devices and software tools. Qualified researchers provide project partners and costumers the perfect opportunity for developing products and test different solutions in power systems and communication networks. The Laboratory infrastructure allows the simulation of both, power system and communications networks together using co-simulation techniques. Some envisaged applications are:

- **Product/system testing**

- Prototype development and product conformance testing, type testing;
- Testing of protection and automation systems;
- Hardware-in-Loop (HIL) simulations.

- **Modelling**

- Model verification/validation (e.g. linear elements models - constant parameters transmission lines, pi-circuits; non-linear models - Surge arrester) using field data and event records.

- **Power systems scenario simulation**

- Studies for the optimal integration of renewable energy sources;
- Power system transient studies and performance assessment in line with European connection grid codes;
- Analysis of power system events.

- **Communications**

- Performing communication networks studies, by means of simulations, to aid its design;
- HIL simulation of network communications using real devices in interaction with simulated environment;
- Testing communication networks performance (measuring parameters and causing impairment).

- **Co-simulation**

- Performing co-simulation (power system simulator and communication network simulator running simultaneously, interacting with each other).

- **Training**

- Staff training for control equipment operation.

R&D
NESTER

Rua Cidade de Goa, 4-B,
2685-038 Sacavém
Tel.: 351 210 011 300
Fax: 351 210 011 710

www.rdnester.com